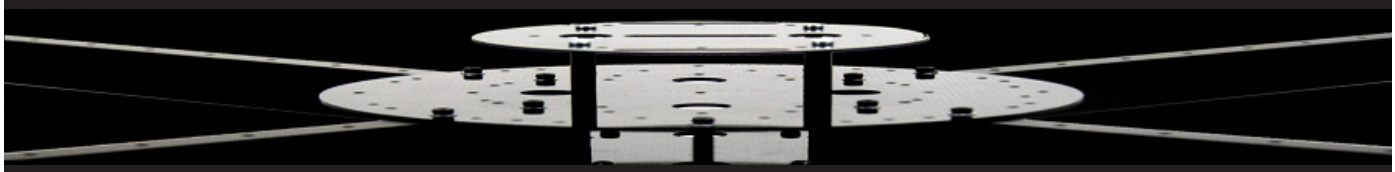

Vulcan Harrier
&
Black widow

Frame Assembly Guide V2.01

www.VulcanUAV.com

Thank you for purchasing the Vulcan Black Widow or Harrier airframe.

These frames are very tough, heavy lifty folding airframes in the X8 configuration. Please follow these build instructions carefully, and we wish you many hours of safe and enjoyable flying!

Note on parts - Part designs are always changing and being improved. Do not worry if the parts or hole patterns you have do not exactly match those shown in this manual, details contained here will still apply.

SAFETY NOTICE

Multicopters can be dangerous and pose a significant risk of injury and damage to property. Always take all necessary safety precautions to avoid damage or injury to yourself and those around you!

Never fly near or over buildings, roads or people.

Always ensure you have plenty of space to fly with an uninterrupted view of your machine at all times.

Always stay well clear of moving propellers.

Before flying.....

Ensure all nuts, bolts and linkages are tight and cannot come undone.

Check your propellers are securely tightened, have no chips, cracks or dents and if they do, replace them as necessary. Propellers should be attached with nylock nuts or double nuts, never relyon a single standard nut to attach your propellers.

Ensure all electrical connections are secure with good contacts, well insulated and cannot come apart.

Make sure all onboard equipment such as batteries, cameras or any other payload is properly and securely attached and cannot come loose, shake, vibrate or move around during flight.

Always make sure all batteries are fully charged and range check your radio.

The Power Disribution Board (PDB)

The first thing to do in your build is prepare the power distribution board. This is a critical part of your multi rotor as it ensures reliable and consistent power supply to all the onboard systems that need power from the main battery packs, including ESCs and your flight controller. Many will have their own ideas about the best way to distribute power on their machine, and whilst this manual is not really aimed at power distribution, we have included some general good practice tips:

Always protect your internal wiring. Any movement of internal wiring can lead to wear of the insulation and eventually a failure, so we would recommend protecting all power wires with heatshrink or similar - any suitable tough covering that is resistant to wear and heat.

ESC control wires are thin and quite vulnerable, and are best protected with something other than heatshrink as the heat from the shrinking process may damage them. Nylon braiding is a good alternative, and although it is less resistant to heat than heat shrink, it is easier to fit over pre fitted plugs, and better looking, so a good choice for any wires that will be visible. If your PDB is of the correct specification and correctly assembled, there should not be excessive heat present.

Good solder joints are critical, and enough heat must be present to fully melt the solder and allow a good bond between the PDB and wires. If you are using our *Vulcan Power* high current PDBs, the thick copper in them will suck the heat from your soldering iron very quickly, so use a powerful iron with a large head that can retain it's heat. A Weller iron of 80W or more with large head is as good choice.

It is a good idea to run dual independent battery connections for redundancy, rather than use battery splitters when using multiple LiPo batteries.

It is wise to run several auxilliary power feeds from the board to supply power to anything you may need now or in future.This will save you having to open the frame and solder in more feeds in future should you find you need them.

Before assembling your PDB, plan the layout of the ESCs within the frame and cut your ESC power wires to length accordingly. Auxillary power feeds can be attached to any spare solder pads on the board, but choose according to where they will run up or down out of the frame plates. There is more on instalation of the PDB and component positioning later in the manual.

Motor Mounts & Arms

First, it is good practice to protect your motor wires from abrasion, especially where they enter and leave the arm, pass by the bolts, or if they need to go around any sharp edges such as the motor mount. Heat shrink is a good choice for this. See FIG 1 below.
Also check the edges of the metal arms where wires enter and leave and make sure there are no sharp edges. If they feel sharp, gentle use of a small file will smooth them.

FIG 1

We strongly recommend when heat shrinking your wires you do so with the wires flat in a line of three, and not as a bunch. This will make inserting bolts through the arms with the wires in place much easier. See FIG 1 above. In some cases motor wires may need to be shortened to fit as too much spare wire inside the frame could cause problems.
Once you have protected your wires, fit two motors to two motor mounts. Ensure you get the angle of each motor such that the wires run easily around the sides of the motor mounts. Do this before fitting the mount to the arm as it is easier to thread the motor wires before mounting bolts are in place. Use washers and thread lock on the motor mount bolts, but be careful not to get any thread lock in the motor.
4 x 30mm pillars with M3 8mm bolts are used to join the motor mounts, and this is the point to also fit the LEDs. Always use thread lock on the pillar bolts. The LEDs are fitted between the motor mounts with two or three pillars running down through the LED housing (subject to motor mount used). We recommend that the wires from the LEDs run from the top of the LED under the top motor mount and down the arm. Always protect the LED wire from damage. You may find using braiding easier than heat shrink for this, but the choice is yours. You will find it easier to insert all three sets of wires down the arm together rather than trying to insert the LED wires after the motor wires. It is also a good idea to mark which set of motor wires come from the top and bottom motor at this point in order to identify them later.
Repeat for all four pairs of motor mounts.
Now fit the assembled pairs of motors and mounts to the arm. Take care when inserting the bolts through the arms not to damage the wires. Fit the mounts to the arms using 2 x M3 45mm bolts with washers and Nylock nuts.
DO NOT OVERTIGHTEN THE NUTS! If you do you can crush the arm!
The nylock nuts will ensure they do not come loose, although you should always check nuts regularly for tightness. See FIG 2 below.
Note: One arm in this image does not have LEDs fitted to show how the pillars are installed.

FIG 2

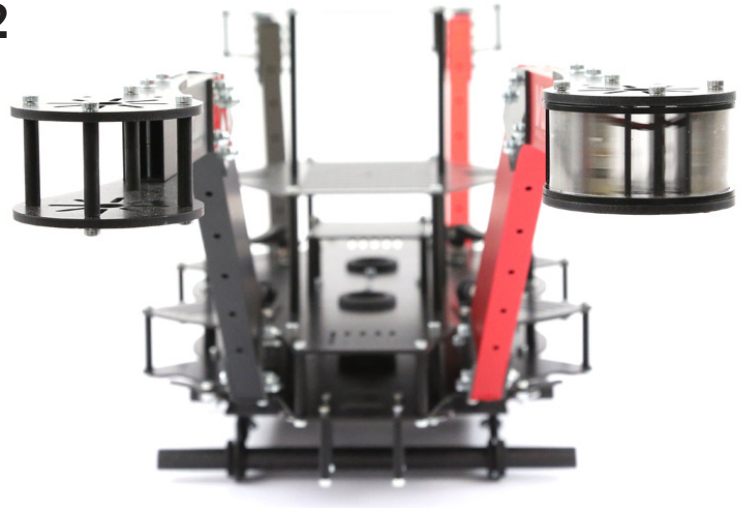

If you are building a Black Widow with Z arms, DO NOT fit the arm brace plates until the wires are threaded. Threading the wires can be awkward and we recommend using a piece of string with a small weight attached. Carefully tie one end to the motor and LED wires, and drop the other weighted end through the arm. You can then use the string to help ease the wires down through the arm and a round the bends. DO NOT pull hard on the string or you can damage the plugs on the end of the wires.
Once the wires are threaded you can fit the Z arm brace plates. Make sure the bolts run between the wires and the arm, this way they will give a smooth curve for the wires to sit on and not a sharp edge. Do not use your Z arms without the brace plates fitted, they are not needed to add strength to the welds but add lateral (twisting) support to the arms.
Once you have completed assembly of the arms you can move onto the frame centre plates.

Frame Centre Plates

Start by fitting two large grommets and attaching 30mm aluminium standoff pillars using 8mm M3 bolts to the lower frame plate (see FIG 3 below). Use thread lock on the bolts holding the pillars.

The top plate has a small standoff plate on 30mm pillars in the centre, and 8 x 60mm pillars for holding the standoff plate. The two 60mm pillars nearest the centre are fitted with 16mm M3 studs that go through the standoff plate and into the 90mm pillars that hold the GPS mount. See Fig 4 below.

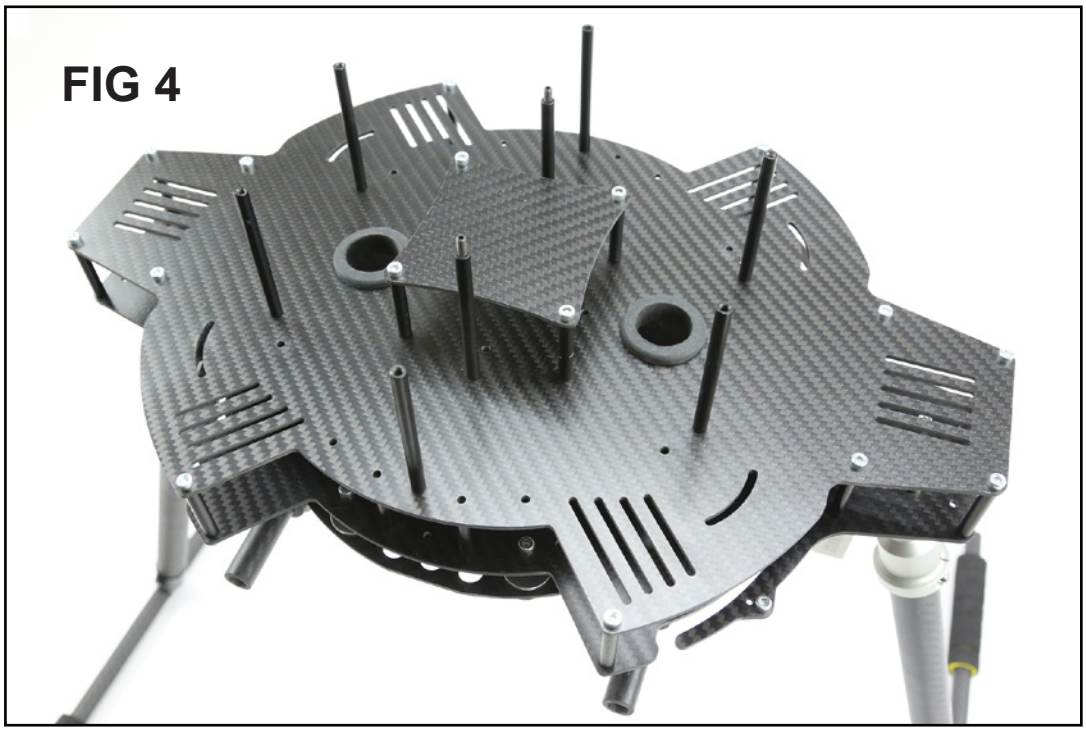

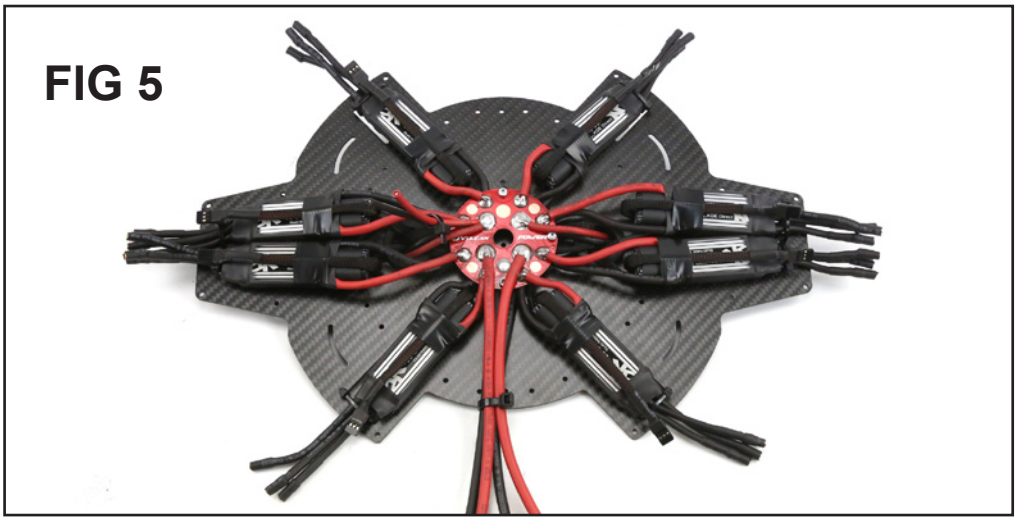

Next fit your power distribution board, ESCs and other internal electronics to the underside of the upper frame plate. As people use different internal electronics and components, this manual does not cover this part of the installation, however FIG 5 shows a typical installation as a guide. Note the positioning of the ESCs.

As a general guide it is good practice to protect all internal wiring against wear or damage. There are different ways of doing this, heat shrink and / or braiding are both good options. It is very important that when you assemble your frame no wires are trapped, and that all wires are properly secured and cannot move. As this is a folding frame, it is also very important to check how the wires are affected by movement of the arm, and to ensure that no wires are rubbed, pulled or trapped during the folding process.

A bit of careful thought and forward planning about where to run wires, how to keep them in place during use, and where to run them up onto the top plate (or out the underneath) to best fit the installation of other components, can save a lot of time later.

Assembling & Fitting the Anti Vibration Plate

Before closing the frame centre plates, you should fit the anti vibration plate, as it will be very difficult to access the bolts once the frame is closed.
The plate uses 8 silicone gel bushes and is rated to around 4.5 Kg max load.
See FIG 6a to 6d below. The gels split in two with the fat half on the underside of the plate.It is then sandwiched between 2 x 18mm washers with a hex pillar and a nyllock nut. The gels should be fully compressed, so tighten the nylock until the nut touches the brass insert in the gel. Ensure when tightening the nylock that the hex pillar is held still and the nylock is turned, do not turn the hex pillar to tighten or you may twist the gel and damage it.

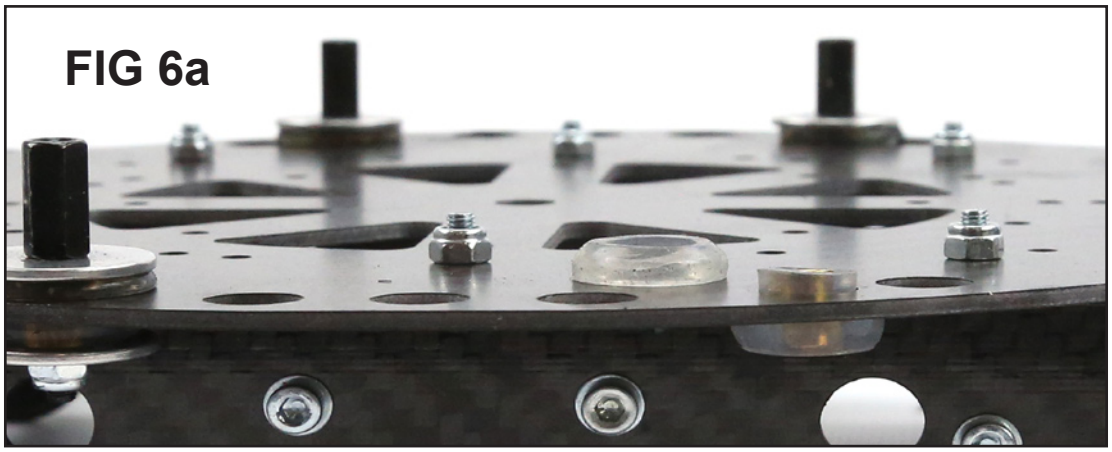
FIG 6a

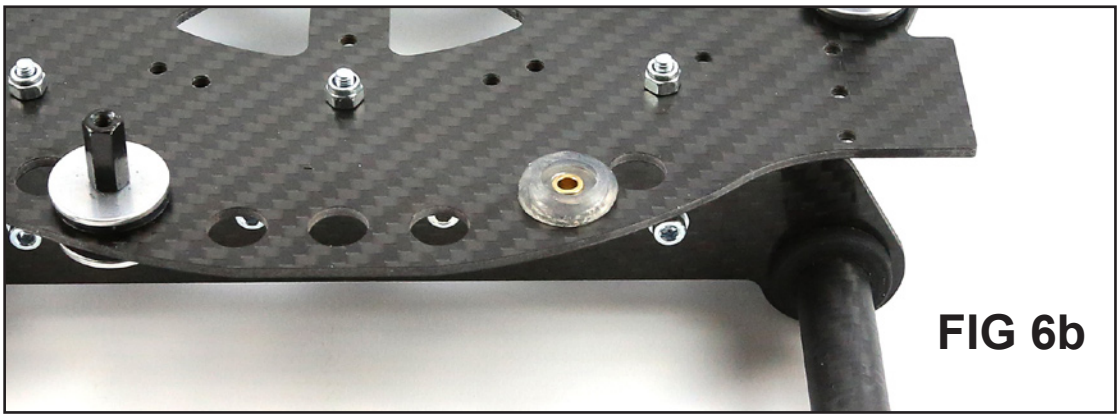
FIG 6b

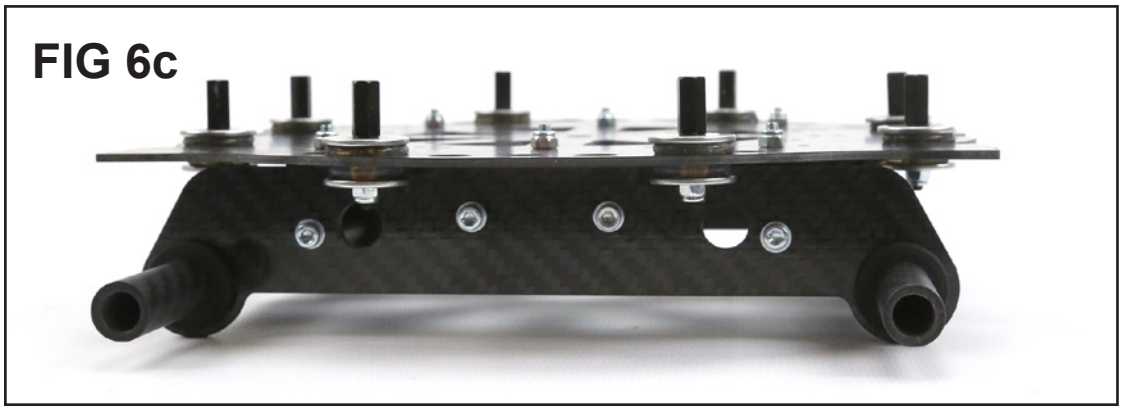
FIG 6c

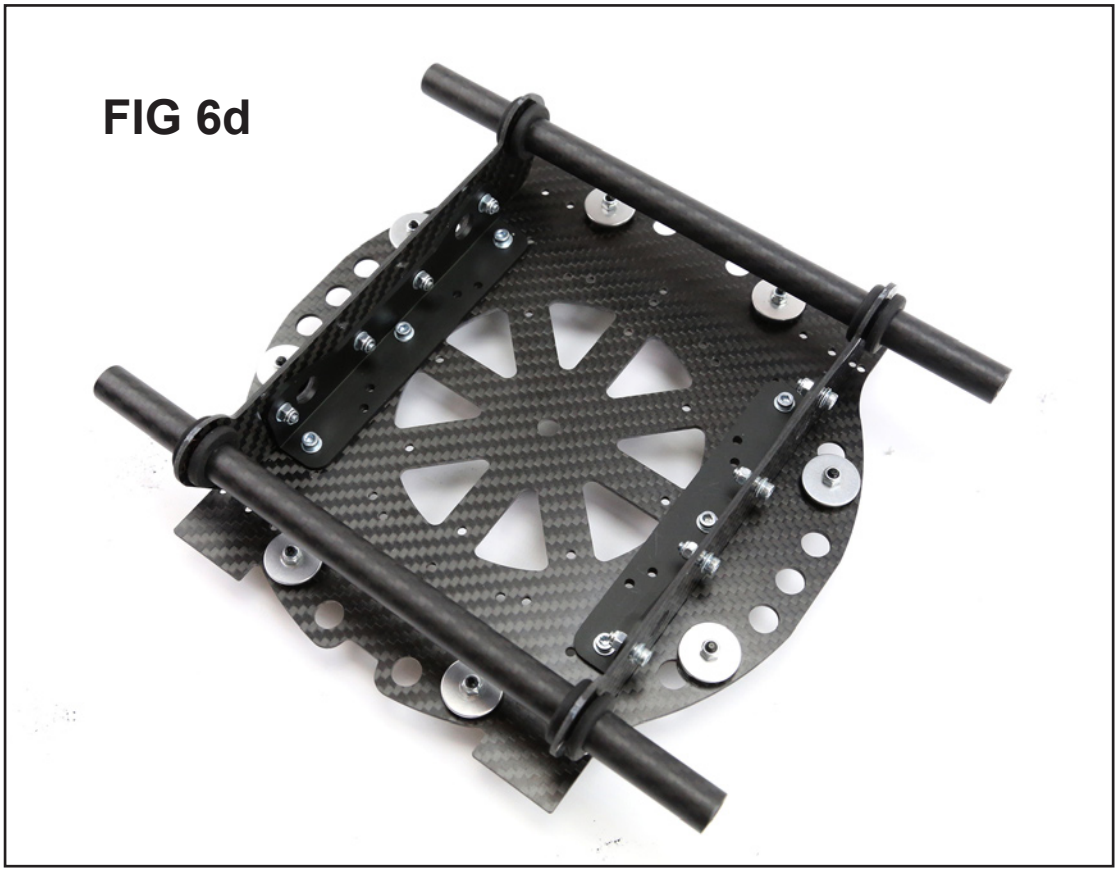

Once the gels are fitted, attach the rail mount to the plate according to FIG 6d above using M3 10mm bolts, nylock nuts and washers. The rails will be tight in the grommets provided. Ensure the edges of the tube have no sharp edges that could damage the grommet when inserting. Lubricant like WD40 can help to slide the rails through the grommets. It is easier to fit the rails through the grommets before attaching to the plate.

Then fit plate to the underside of the lower frame plate using 8mm M3 bolts into the top of the hex pillars. Ensure the hex pillars are held still and the bolts are tightened into them. Do not twist the hex pillar during this process or you may damage the gel.

Use thread lock on the bolts.

If you are fitting retracts now is a good time to fit them as it will be harder to get to the bolts once the frame is assembled. The Black Widow frame is pre drilled for different retracts including Secraft, Arris and Foxtech servoless. You can also use S800 style servo driven retracts, and in this case you would replace the 12mm rails with those that came as part of the reatracts. If you are doing this we recommend the quick release version of the anti vibbration plate. It is the same plate but fitted with four quick release clamps instead of the rail mounts, which grip the rails on the retracts, and allow them to be easily removed.

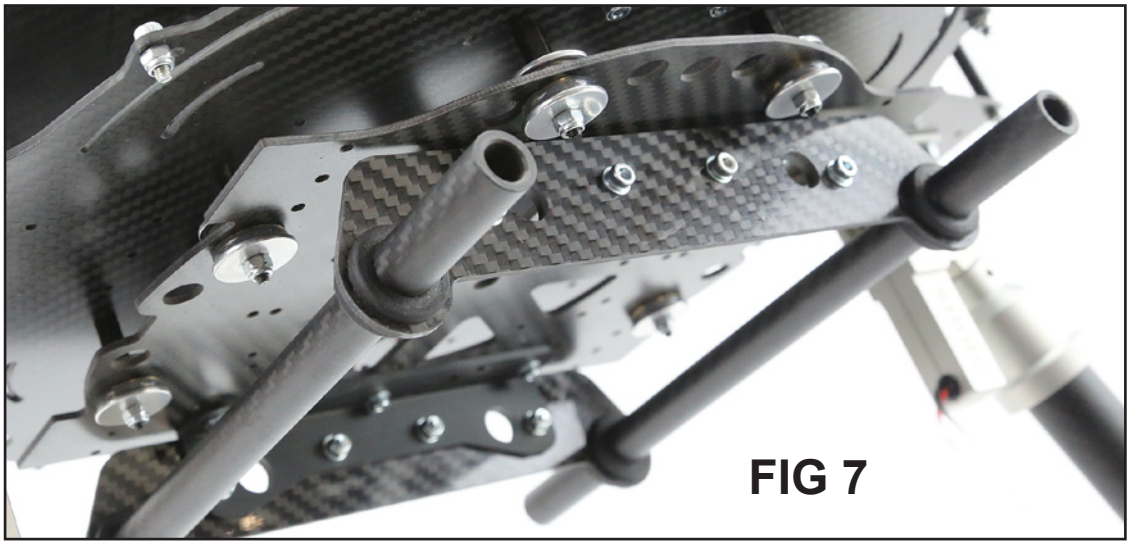

Main Assembly

Once the anti vibration plate is fitted, you are ready to close the main frame and fit the arms. Fit the top plate to the pillars using M3 8mm bolts and thread lock, making sure you have fed any wires through the necessary holes in the top and bottom plate before closing. Large holes for wires should be fitted with the 25mm grommets provided to protect the wires running through thew holes. Once the frame plates are closed you can fit the arms.
Arms should be slid into the frame making sure the motors wires run in the correct locations for the relevant ESCs. Align the inner most hole in the arm with the correct hole in the frame plates. Take one M3 45mm bolt, fit a washer and then the carbon load spreader plate, and insert doiwn through the arm. This can be tight, and the bolt must be carefully placed down the side of the wires, and then out of the lower hole.

NOTE: Getting the bolts through the arms and past the wires without damaging the wires is not easy, so here is one way that can help. It is important that wires have been heat shrunk in a flat line of three. You will have two of these, and probably a thinner wire for the LEDs coming out of the end of the arm. You must twist the wires so the two sets of three sit one above the other on one side of the arm. Once this is done insert something blunt and thin down through the outer hole of the arm through the slot. Make sure you angle it so all wires are on one side of it inside the arm, then straighten it and push it out through the bottom hole. See Fig 8 below, we have used a thin long hex key for this which has a ball end so as not to damage anything. This will hold the wires in place while you insert the inner arm bolt. Make sure the inner bolt goes down the same side of the wires as the hex key (or whatever you are using), and both are on the same side of the bolt. Then remove the hex key and insert the cam lever making sure both sets of wires remain on the same side of cam lever by angling the shaft as you insert.

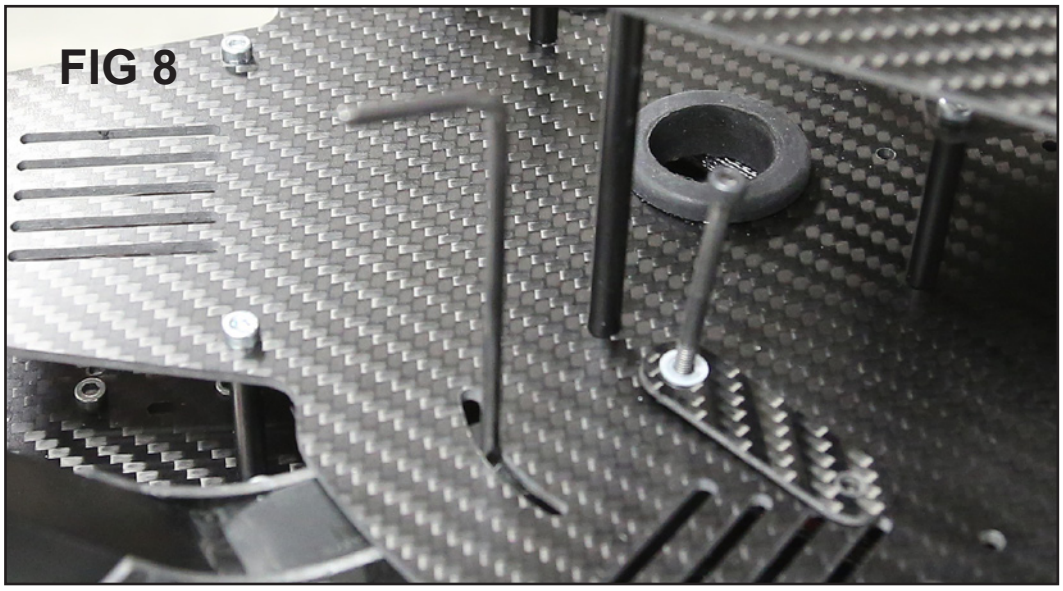

Once this is done, fit a second carbon load spreader plate, washer and nut on the other end of the inner bolt and cam lever shaft then fit with large 18mm aluminium washer, a 3mm thrust bearing and M3 nylock nut on the bottom threaded end of the lever shaft. The inner bolt is fitted with a nylock nut and washer and should be loose enough to allow the arms to move, but tight enough to provide some resistance to movement. Close the cam lever and adjust the nylock nut to get the correct pressure on the arm. The nuts should be tightened such that the cam levers can be opened by hand but are tight and diffcult to open and close. If they are too loose the arms will not be properly supported. Always ensure the cam lever is sitting correctly in it's saddle before closing.
Once arms are fitted, fit the safety latches. These are simply M3 8mm bolts that fit the carbon slices in the lower frame plate. See FIG 9 below. To open and close the arm when these are fitted, bend the frame section with the bolt downwards and rotate the arm over the bolt head.

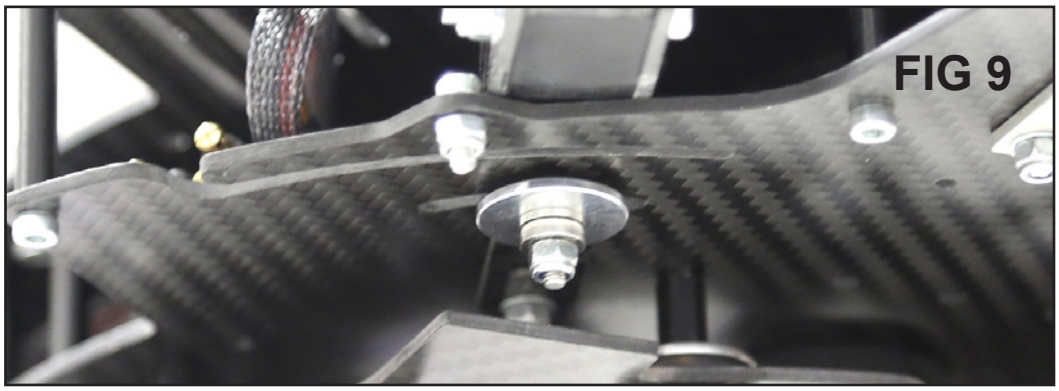

Standoff Plate

Before fitting the standoff plate you will probably want to install your flight electronics. Once this is done, fit the top standoff plate by placing it over the pillars with the 16mm studs and attach to the rest fo the pillars with 8mm M3 bolts. The two 90mm pillars which hold the GPS mount screw onto the studs, and the oval puck mounting plate is attached using two more 8mm M3 bolts. See Fig 10 below.

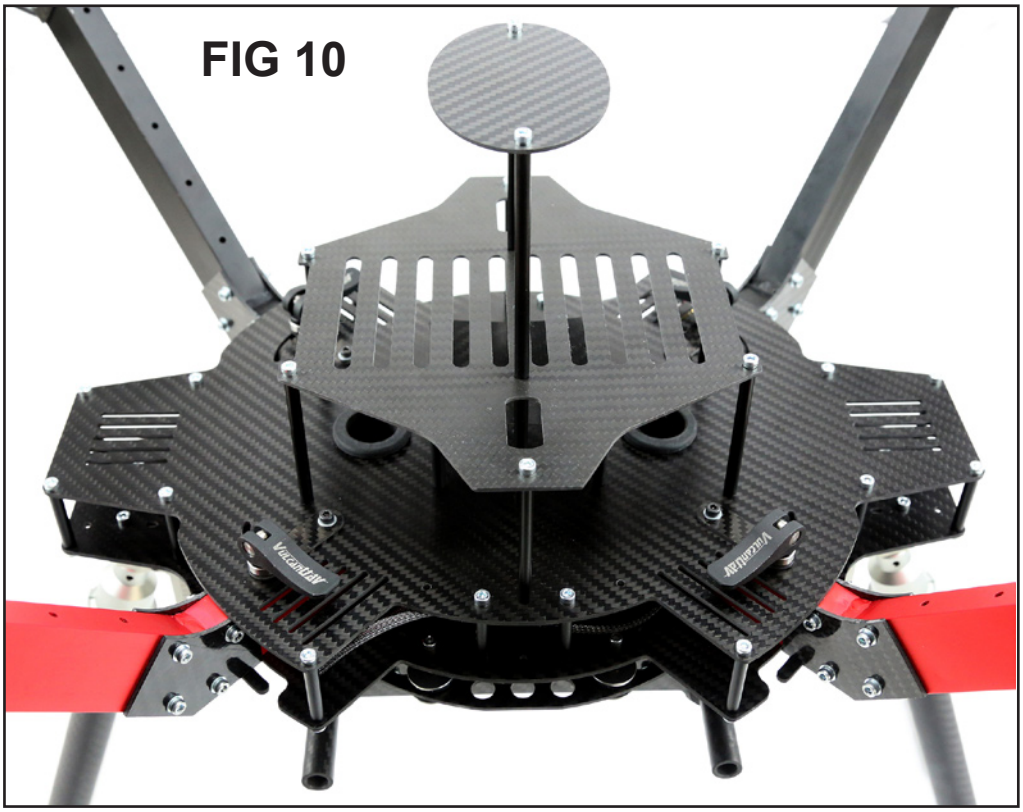

Final Points

Multirotor aircraft can be extremely dangerous, so it is important that safety is paramount when building your machine. Do not rush the build, ensure all wires are properly protected, and whenever fitting a part ensure that no wire is trapped, crushed or likely to be pulled during use, especially during folding. Always ensure all wires, and other components are properly secured and cannot come loose or move around during flight.

Before first flight, re check all bolts for tightness, ensure the arm locking mechanisms are all in place and are adjusted and working correctly, and ensure the arm mounting bolts and cam levers are properly adjusted. Cam levers should be able to be opened by hand, but should be tight and fairly difficult to open and close.

If you have any questions or are unsure of any aspects of this assembly, please feel free to contact us and we will be happy to help!

info@vulcanuav.com

General MultiRotor Operational Guidelines

PRE FLIGHT CHECKS

The aircraft should be carefully checked before every flight:

 Check propellers for nicks and cracks, and if any are found the prop must be changed.
 Check prop fitting for tightness.
 Check all nuts and bolts, clips and other fittings on the aircraft for function and tightness.
 Check all wiring is properly secured such that it cannot move around, and that all plugs are properly connected and cannot come loose.
 Check all on board equipment for correct and secure attachment to the aircraft. All payload items and ancillary equipment, including cameras and gimbals, should always be attached to the aircraft with a secondary safety line in case of a failure of the primary mounting.
 Check charge level and physical condition of batteries. Ensure batteries are securely attached and cannot come loose, move, shake, vibrate or come away from the aircraft.
 Check all battery connections are tight and cannot come apart.
 Check the Centre of Gravity of your aircraft is correct.
 Always undertake a radio range check before flying, and ensure radio batteries are charged.
 Always set a timer with an audible alarm to remind you when you are getting near to depleting your flight batteries.
 If you are using a folding airframe, always ensure the folding mechanism is tight and / or correctly adjusted and cannot come undone during flight

AIRCRAFT MAINTENANCE

It is the responsibility of the aircraft operator to familiarise themselves with all aspects of their aircraft. All on board equipment must always be used in accordance with the instructions and guidelines of the manufacturer of said equipment, and never used in any manner outside its intended use or operational limits.
Your aircraft is designed to operate within certain weight limits. Never exceed the limit of your aircraft lifting capacity. As a general rule, All Up Weight (AUW - also known a takeoff weight), should not exceed 60% of maximum thrust.
The aircraft should be checked regularly for any wear, damage, defects or other problems.
Always immediately change any parts showing signs of wear or damage of any kind.

Propellers:

Propellers should always be checked for balance prior to use, and changed if they show any signs of damage whatsoever.
It is critical that propellers are tight and cannot come loose during flight, so if a single nut attachment is used, self locking nuts should always be used to attach propellers. Nuts should be tight but take care not to over tighten. Doing so can result in damage to the propeller hub which can lead to failure in flight. Over tightening can also cause damage to the propeller retaining nut and propeller shaft thread, which could also lead to loss of a propeller during flight.
Never use any kind of sharp object pushed into the motor to hold it still during tightening.
Take great care not to allow propellers to come into contact with objects when on the ground, for example when loading or unloading from a vehicle, as this can easily result in damage.

Motors:

Motors contain powerful magnets, and they should always be kept well clear of small metal objects. It is very easy for a motor magnet to pick up something small like a washer, bolt, or even small shards or filings of metal with their magnets. If this occurs it can prevent the motor turning smoothly and operating correctly, can cause excessive and premature wear of moving parts, can induce a short circuit within the motor, which in the worst case, can lead to instant and catastrophic failure during flight.

The most common source of problems for motors is wear of the bearings, which can lead to vibration, reduction in performance, and in extreme cases to motors failure during flight.
Motors should always be checked for smooth operation, and early signs of wear to the bearings. Check motors regularly for play, or sideways or up and down movement in the motor shaft.
Motor bearing life is specified with a Mean Time to Failure (MTTF). Motors should be changed at around 50% of this specified average bearing life span.
One of the clearest signs of upcoming bearing problems is a change in the sound of a motor during flight. **Familiarise yourself with the sound of your aircraft and always take care to listen for any deviation in sound from normal.**
Abnormal noise from vibration can also be a good indicator of something coming loose.
Always land immediately if you notice a change in the sound of your aircraft.

Lithium Polymer Batteries:

Lithium Polymer batteries (LiPos), can be extremely dangerous, and must be handled with care.
Always charge your battery on a hard, non flammable surface, and store in a fireproof container or LiPo bag.
Never leave your battery unattended during charging.
For maximum lifespan charge your battery slowly, ideally at 1C (1 x battery capacity), even if the battery is capable of a higher charge rate.
Batteries can get hot during use. If possible always charge your battery when cold.
Never allow your battery to discharge below 3.2v per cell, or permanent damage may result.
Never allow your battery to short.
When connecting your LiPos to you aircraft a spark can often result. This is normal and is a result of ESC capacitors charging.Always make a clean and quick connection to minimise sparking. Multiple sparking during connection can cause problems for on board systems, especially those running firmware, such as your flight controller.
Never drop your battery or permanent damage can occur. This may not be visible but could lead to problems during use or charging.
If your battery ever becomes physically distorted or expanded during use or charging, immediately cease use or charging and replace the battery.
Always log flight times and charges for a particular battery. You should replace your batteries after around 100 - 200 cycles, subject to performance.

GENERAL FLYING LAW (UK)

Under law, if your aircraft weighs less than 7Kg, it is illegal to fly over, or within 50m of buildings or other man made structures, vehicles, overhead cables, roads and people.
If your aircraft weighs between 7 Kg and 20 Kg, this distance increases to 150m.
Exception can be made if you have full control over the area in which you are flying.
The maximum altitude allowed is 400 feet.
The aircraft must always remain in line of site of the pilot and at a distance of no more than 500m. If autonomous operations are being carried out, maximum flight range is reduced to 250m and a competent pilot must always remain at the controls in case of problems.
Anyone flying a multirotor or any other radio controlled aircraft for pleasure must have third party liability insurance. The easiest way to obtain this is to join the BMFA (British Model Flying Association), where liability insurance is included in your membership fee. This insurance is only valid if all BMFA rules are followed, and flying is done at an approved BMFA site.
If you are intending to undertake any kind of commercial operations with your multirotor, you must be certified, and have written permission to fly from the CAA.

Liability insurance for commercial operations is mandatory.